MERACH

POWERED BY MERACH

USER MANUAL

MAGNETIC ELLIPTICAL MACHINE

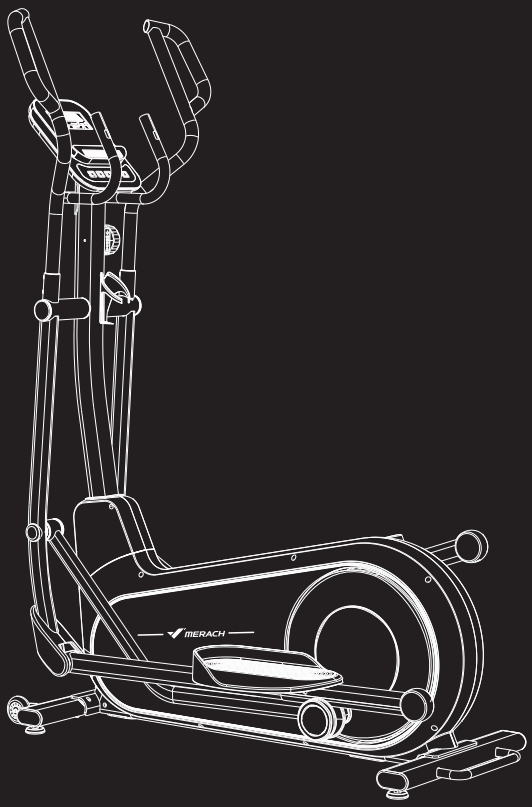

Questions or Concerns?

IMPORTANT!
Please read all details before use, and keep this user manual for future reference.
PLEASE CONTACT US BEFORE THE RETURN: Mon-Fri,9:00 am-5:00 pm PST/PDT
Phone: 44-1315070255 Mon-Fri 10am-7pm PST UK/DE/FR/ES/IT/NL
support@merach.com

MODEL： MR-E27



WHO WE ARE

Our customers aren't just important; their health, fitness, and pure enjoyment for live is at the core of everything we do at MERACH. From innovative fitness research and cutting-edge product development, to our exceptional purchasing & after-sales service, we are our customers' life-long partner in crafting a better fitness future.

Through quality fat-burning & muscle-building fitness equipment such as our quality rowing machines and exercise bikes, plus our innovative MERACH APP, and digital courses, we give the opportunity and support to all to pursue their health and fitness goals and discover a new way of healthy living.

Welcome to MERACH

CONTENTS

Safety Instructions 01
Specification 04
Parts List 05
Parts Tool List 06
Installation Guide 07
Product Usage Instructions 15
Monitor Instructions 17
App Setup Instruction 21
Maintenance Guide 23
Warm-up 22
Warranty Information 24

Please read the entire manual carefully before installing and using the machine, and save it for further use.

SAFETY INSTRUCTIONS

Please keep this manual in a safe place for future reference.

- It is very important to read the entire manual thoroughly before installing and using the machine. Safe and effective training can only be achieved if the machine is properly assembled, properly maintained and used. Make sure all users are familiar with all warnings and precautions of this machine.
- Please consult your physician to determine if you have any medical or physical conditions that could put your health and safety at risk or prevent you from using the equipment properly. Your physician's advice is essential if you are taking medication that affects your heart rate, blood pressure, or cholesterol level.
- Please always pay attention to your body signals, improper use of the machine may affect your health. If you experience any symptoms (including headache, chest pain, irregular heartbeat, shortness of breath, dizziness, or any discomfort), stop exercising immediately and consult your physician, get the permission before training again.
- Always keep children and pets away from the machine. The machine is for adult use only.
- Please use this machine on stable and horizontal ground level, and put a protective layer on the floor or carpet to prevent a floor from damaging. Make sure the distance between the machine and each obstacle is at least 2.0 ft (0.6m).
- Please check all screws and nuts are properly tightened before using the machine.
- The safe use of the machine can only be guaranteed if the regular maintenance and repairs of undertaken, and worn out and broken parts are changed.
- Please follow the instructions in this manual to use this machine. Please stop using and operating immediately when you find any defective parts or hear any abnormal sound. Make sure all issues are resolved before using it again.
- Please wear sports clothes, sports shoes, or other proper clothes. Loose-fitting clothing is not recommended, as loose clothing may get caught in the machine, hindering operation and possibly causing an injury.
- This machine is only for home use. The Maximum user weight is180kg/400lbs.
- This machine is not for professional medical treatment.
- This machine is only for customer use.

- The overall performance of the machine and all moving parts must be checked regularly to ensure the safety of the machine.
- If the moving parts are damaged, please do not use the machine until the parts are repaired.
- Keep the children away from the machine. The equipment is not for children to use or play with. They can injure themselves accidentally.
- When using the machine, please put the pedal to the lowest position for easy to get on the machine.
- Before mounting or dismounting move the pedal on the mounting or dismounting side to its lowest position and bring the machine to a complete stop.
- When the product is in use, it follows an elliptical motion trajectory driven by the inertia of the internal flywheel. Resistance needs to be manually adjusted using the knob during usage. This product is not speed-dependent; the speed is reflective of the frequency of the motion trajectory. Before stopping the use of the equipment, there will be a certain level of inertia. Please ensure that the pedals have come to a complete stop before leaving the device.

Care & Maintenance

- Do not store the machine in a place exposed to direct sunlight, wind and rain, or with high humidity. If needed, please pack the machine to keep children away from touching or playing with it.
- Please check if there's rust or cracks after long-term storage.
- Please understand that for the consumable parts, the wear and tear may also occur even with proper maintenance.
- For long-term use of this machine, please wipe the dust regularly. Do not water it directly, or wipe with gasoline, abrasive powder, etc. Otherwise, it might cause cracks on the parts or main body, electric shock or fire. Please use dilute neutral detergent for maintenance.



Before starting any training, please consult your physician, especially for those who are over 35 years old or with pre-existing health conditions. Please read all instructions before using the machine.

CE	This symbol stands for "Conformité Européene", which means "Conformity with EU directives". With the CE-marking the manufacturer confirms that this product complies with applicable European directives and regulations.
UK CA	This symbol stands for "UK Conformity Assessed", which means "Conformity with British Standards 11". With the UKCA-marking the manufacturer confirms that this product complies with applicable British Standards.

SIMPLIFIED EU DECLARATION OF CONFORMITY

- Hereby, Zhejiang Yulu Electronic Technology Co.,Ltd. declares that the fitness equipment MERACH MR-E27is in compliance with Directive 2014/53/EU.
- The full text of the EU declaration of conformity is available at the following internet address: https://merachfit.com/pages/declarations-of-conformity

NOTES ON DISPOSAL



Packaging materials are raw materials and can be recycled. Separate the packaging materials correctly and dispose of them properly in the interest of the environment.
Your local administration can provide additional information.



Used devices do not belong in household waste!
Dispose of used devices properly! Doing so helps fulfill our responsibility to protect the environment. Your local administration can provide information on collection points and opening hours.



Batteries do not belong in household waste!
As the end user, you are legally required to return discharged batteries to a collection point. You can take your old batteries to the public collection points in your community, or you can take them to any place where batteries of that type are being sold.

Manufactured by:
Zhejiang Yulu Electronic Technology Co.,Ltd.
Room 805, 8th Floor, Xianfeng Technology Building, 298 Weiye Road, Binjiang District, Hangzhou, Zhejiang Province, China
yulu_mrk@merach.com

Imported by:
HANGZHOU JINGGE E-COMMERCE LTD
Room 1205, Xianfeng Technology Building,
298 Weiye Road, Puyan Subdistrict, Binjiang District, Hangzhou, Zhejiang Province,China
jingge_mrk@163.com

SPECIFICATIONS

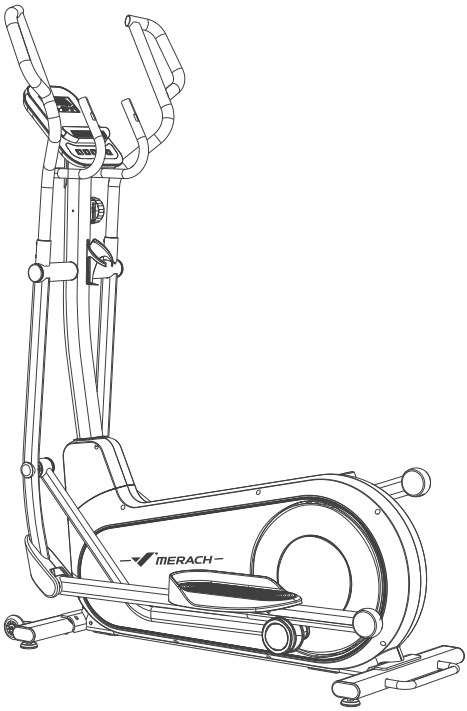

Name:	MERACH Magnetic Elliptical Machine
Model:	MR-E27
Resistance:	Magnetic Resistances(1-8)
Recommend Max Weight:	400lbs/180kg
Net Weight:	130.5lbs/59.2kg
Product Dimensions:	58.6*22.3*65.1inch/1488*566*1653mm
Radio Frequency:	2.4GHz
Radio Frequency Band:	2402–2480MHz
Maximum RF Power:	3.09dBm

PARTS LIST

Check if all parts and accessories are in the package.

#1 Main Frame

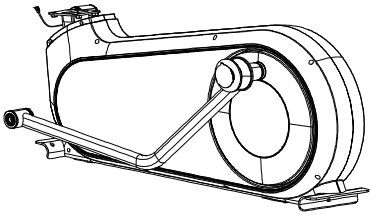

#2 Front Foot Tube

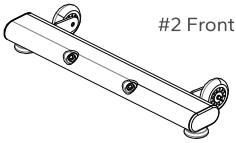

#3 Rear Foot Tube

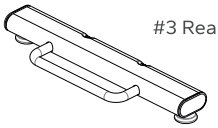

#4 Handlebar Post

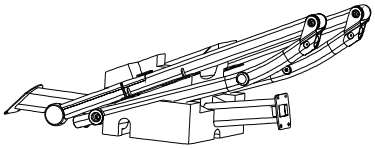



#45 Left Pedal

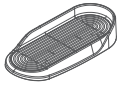

#46 Right Pedal

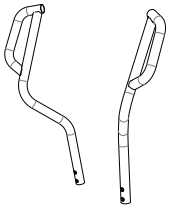

#15 Left Handlebar
#16 Right Handlebar



#38 Left Handlebar Cover x2
#39 Right Handlebar Cover x2



#41 Monitor



#63 Cup Holder



#19 TCD

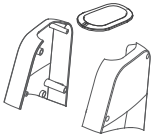

#40 Handlebar Post Gasket
#36 Left Pillar Decorative Cover
#37 Right Pillar Decorative Cover



#64 Roller Cover x2



#109 Screw Hole Plug x2

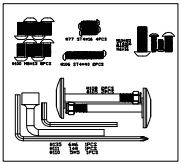

Screws&Kits

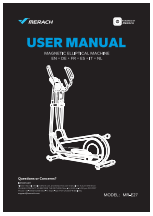

User Manual

PARTS TOOL LIST

Step 1		#122 Flat Head Hexagon Socket Combination Screws M10*25 x4 #113 Flat Head Hexagon Socket Screws M5*35×1 #135 Allen Wrench ×1
Step 2	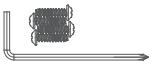	#77 Self-tapping Screws ST4*16×4 #110 Allen Wrench ×1
Step 3	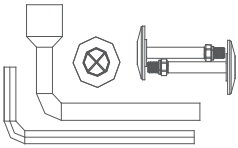	#111 Socket Wrench #14×1 #105 Ni Cap M10 ×2 #135 Allen Wrench ×1 #108 Three-piece Screw Decorative Cap ×2 #109 Screw Hole Plug ×2
Step 4	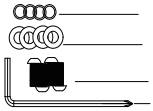	#96 Flat Head Hexagon Socket Screws M8*25×4 #121 Curved Washer×4 #102 Elastic Washer×4 #110 Allen Wrench ×1
Step 5		#100 Flat Head Hexagon Socket Screws M8*13×8 #110 Allen Wrench ×1
Step 6		#69 Flat Head Hexagon Socket Screws M8*18×2 #110 Allen Wrench ×1
Step 7		#101 Round Head Hexagon Socket Screws M6*16×4 #110 Allen Wrench ×1
Step 8		#75 Flat Head Hexagon Socket Combination Screws M8*16 x4 #110 Allen Wrench ×1
Step 9		#106 Self-tapping Screws ST4*40×2 #107 Phillips Round Head Screw M4*12 ×2 #110 Allen Wrench ×1
Step 10		#64 Roller Cover×2

INSTALLATION GUIDE

Tips | Scan QR code to watch installation video

WARM TIPS: Recommend that two people assemble the equipment together, because of the equipment is relatively large.

Unboxing Guide

A. Open the carton from the bottom and take out the equipment.

B. Remove 2PCS Screws (69) with a Allen Wrench (110) and take down the Middle Handrail (17).

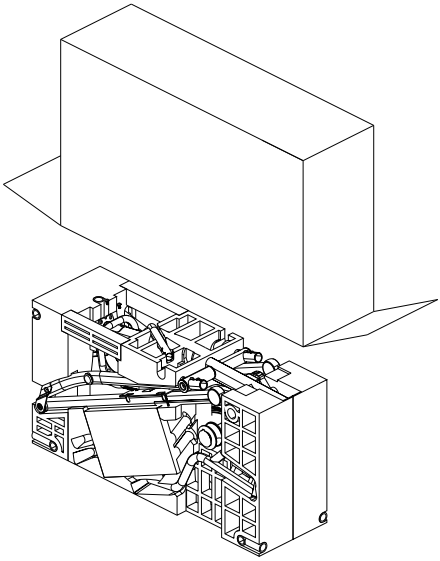

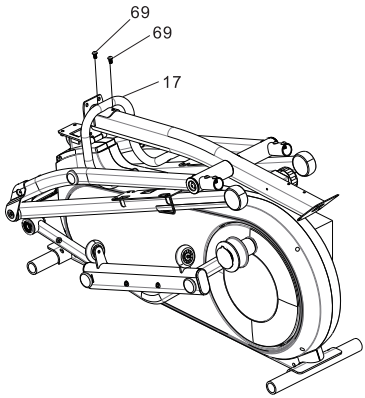

Step 1: Locking the Handlebar Post

A. As shown in the Figure, lift the Handlebar Post (4) up in the direction of the arr

B. Use the Allen Wrench (135) and 4PCS Flat Head Hexagon Socket Combination Screws(122) to lock the Handlebar Post (4).

C. Align the Knob (19) with the lower section of the TCD (24), and fasten it securely using the Screw (113).

D. Wrap the 4-PIN Extension Cable (129) around the guiding Zip Tie inside the Upright Tube (4), and use the Zip Tie to pull the 4-PIN Extension Cable (129) out through the opening of the Upright Tube.

NOTE: After pulling out the Extension Cable, please secure it with a Zip Tie to prevent it from slipping back into the tube.

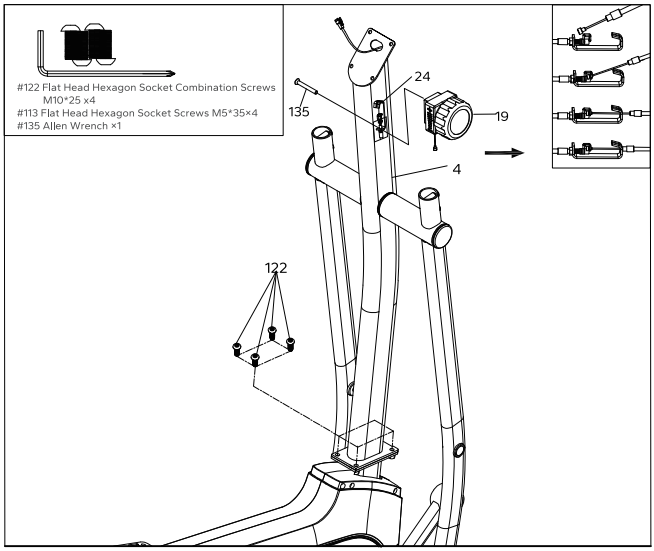

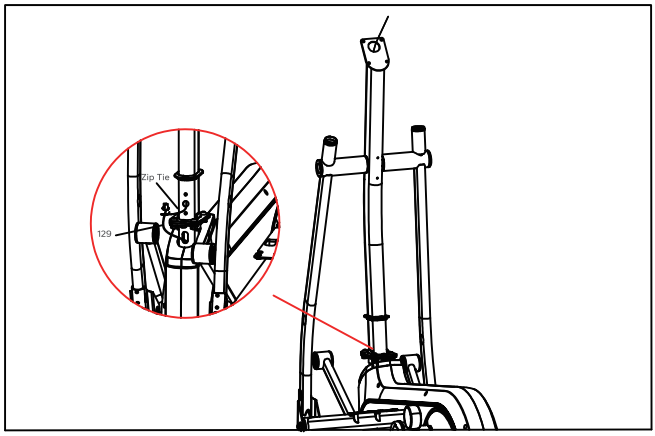

Step 2: Installing the Handlebar Post Decorative Cover

A. Place the Left and Right Pillar Decorative Cover (36 & 37) on the respective sides of the Handlebar Post (4).
B. Use an Allen Wrench (110) and 4PCS Self-tapping Screws (77) to tighten the Left and Right Pillar Decorative Cover (36 & 37).
C. Place the Handlebar Post Gasket (40) over the Pillar Decorative Cover (36 & 37).

NOTE: There are two pillars on the inside and bottom of the Left & Right Pillar Decorative Cover (36 & 37) that need to be aligned with the holes in the outer cover before they can be closed (as shown in the Figure).

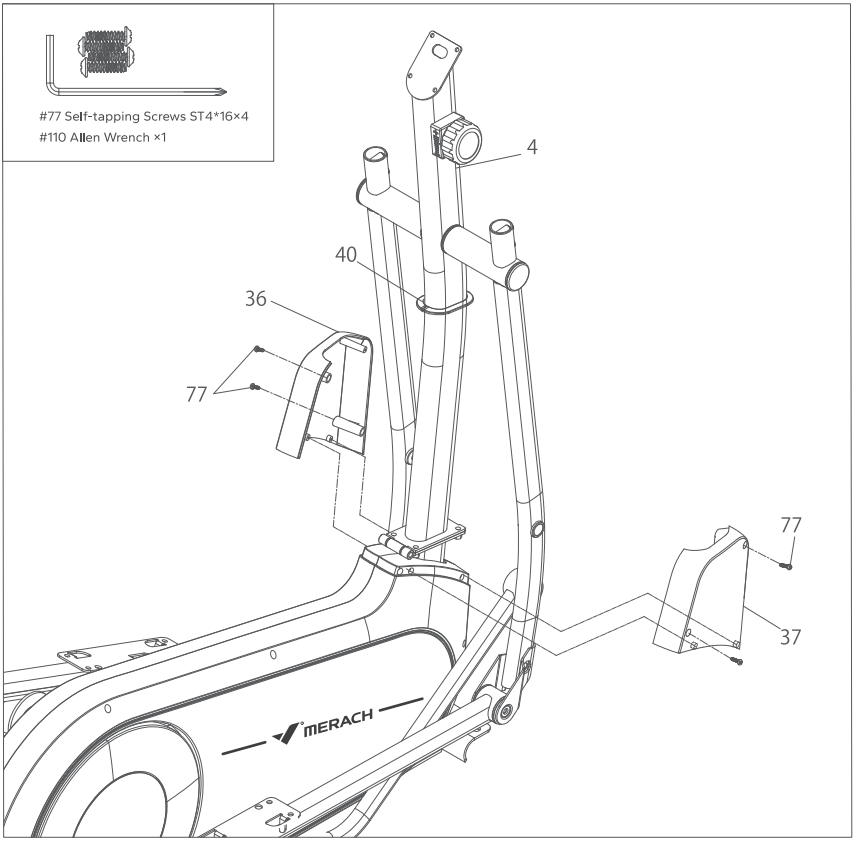

Step 3: Installing the Connecting Rod Pipe

A. Lift the Right Connecting Rod Pipe (11) and align it with the holes on the Right Lower Handle Pipe (7).

B. Insert 1PCS Three-piece Screw Decorative Cap (108) through the Right Connecting Rod Pipe(11), align it with the screw hole on the upper part of the Right Lower Handle Pipe (7), and tighten it using the Allen wrench(135).

C. Tighten 1PCS Ni Cap (105) with a Socket Wrench (111), and finally insert the Screw Hole Plug (109).

D. Repeat the same process to connect the Left Connecting Rod Pipe (12).

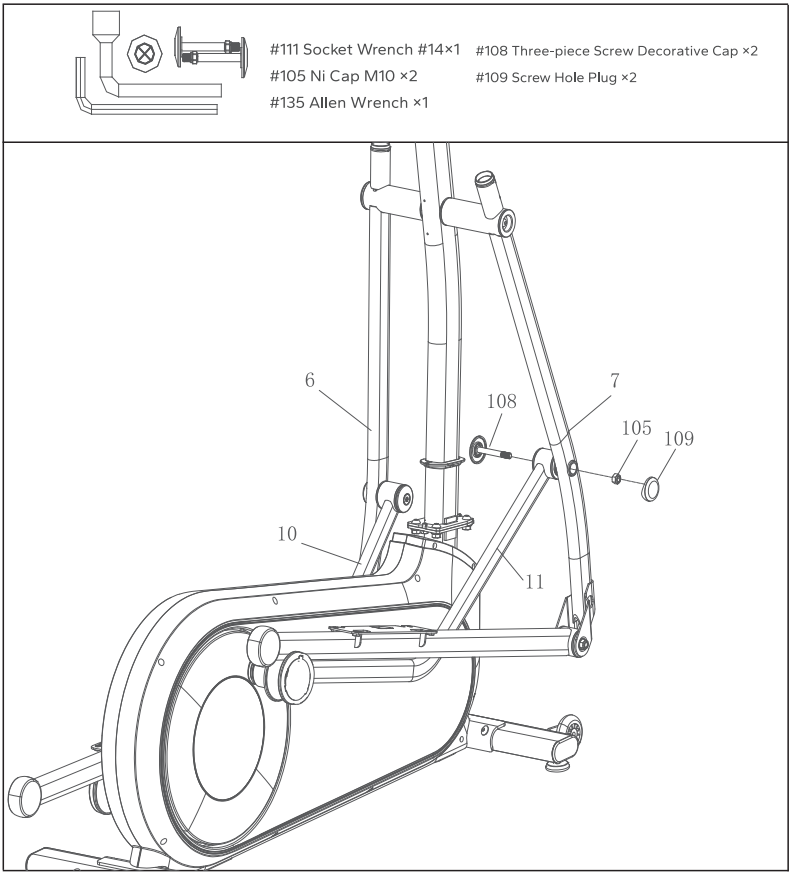

Step 4: Installing the Foot Tubes

A. Align the Front and Rear Foot Tubes (2 & 3) with the screw holes at the front and rear ends of the Main Frame (1) respectively.

B. Use an Allen Wrench (110), 4PCS Flat Head Hexagon Socket Screws (96), 4PCS Curved Washer (121) and 4PCS Elastic Washer (102) to tighten the Front and Rear Foot Tubes (2 & 3) separately.

NOTE: Please distinguish the direction of the Front and Rear Foot Tubes (as shown in the Figure).

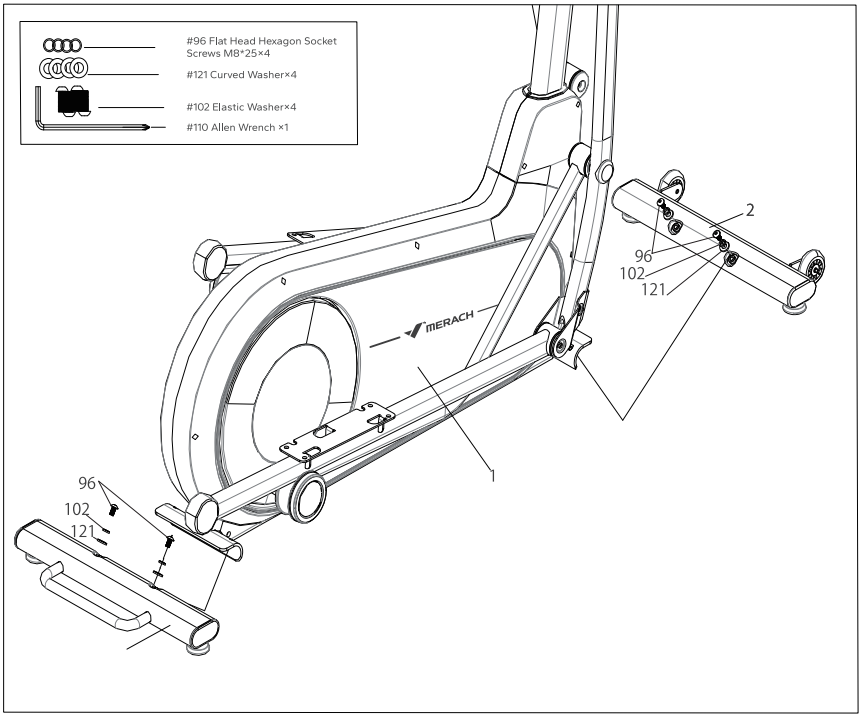

Step 5: Installing the Pedals

A. Place the Right Pedal (46) on the Right Pedal Tube (9) mounting bracket and align the holes.
B. Use an Allen Wrench (110) and 4PCS Flat Head Hexagon Socket Screws (100) to tighten the Right Pedal (46).
C. Install the Left Pedal (45) in the same way.

NOTE: Raise the pedal tube up for screwing conveniently the Flat Head Hexagon Socket Screws(100) into the Foot Pedal.

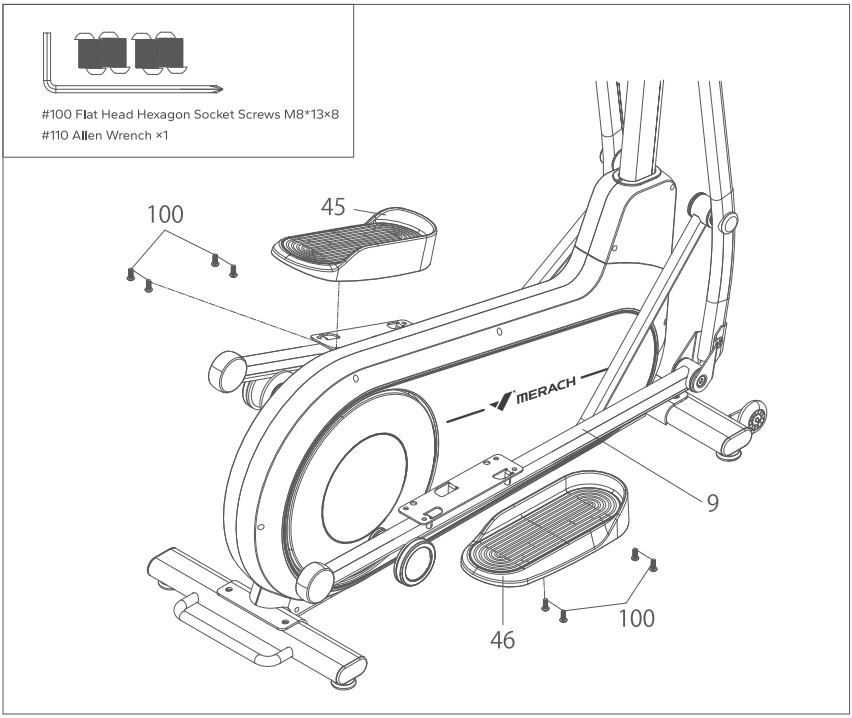

Step 6: Install the Middle Handrail

A. Thread the wire of Middle Handrail (17) through to the bottom of the Handrail Post (4).

B. Align the Middle Handrail (17) and the Handlebar Post (4) with the holes.

C. Tighten the Middle Handrail (17) with the Allen Wrench (110) and the 2PCS Screws (69) removed in advance.

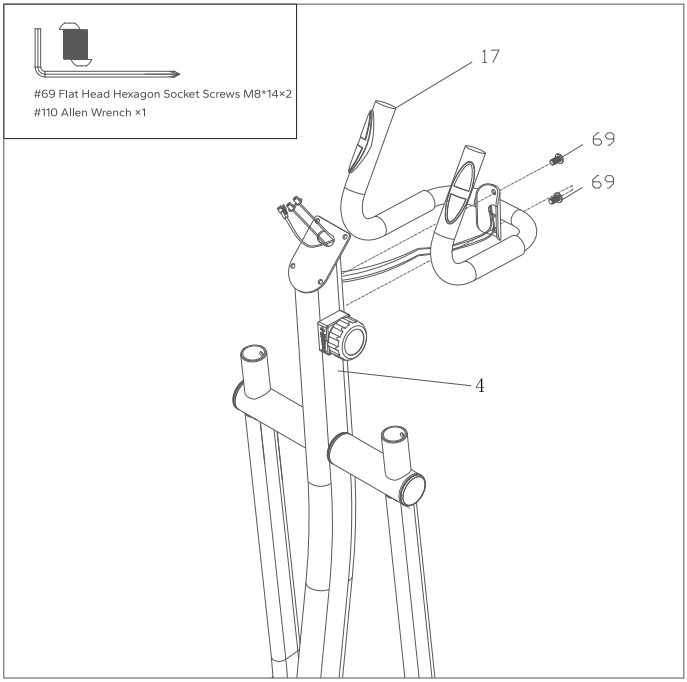

Step 7: Installing the Monitor

A. As shown in the Figure, connect the sensor wire.
B. Place the Monitor (42) on the mounting bracket of the Handlebar Post (4) and align the holes.
C. Use an Allen Wrench (110) and 4PCS Round Head Hexagon Socket Screws (101) to tighten the Monitor (42).

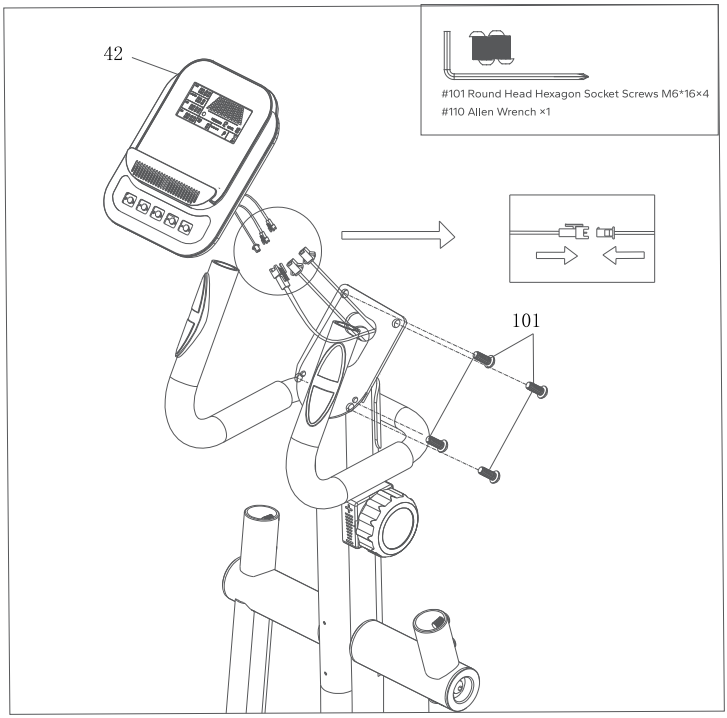

Step 8: Installing the Handlebar

A. Connect the Right Handlebar (16) labeled with "R" to the Right Lower Handle Pipe (7) and align the holes.

B. Use an Allen Wrench (110) and 2PCS Flat Head Hexagon Socket Combination Screws (75) to tighten the right handlebar tube (16).

C. Install the Left Handlebar (15) labeled with "L" following the same procedure.

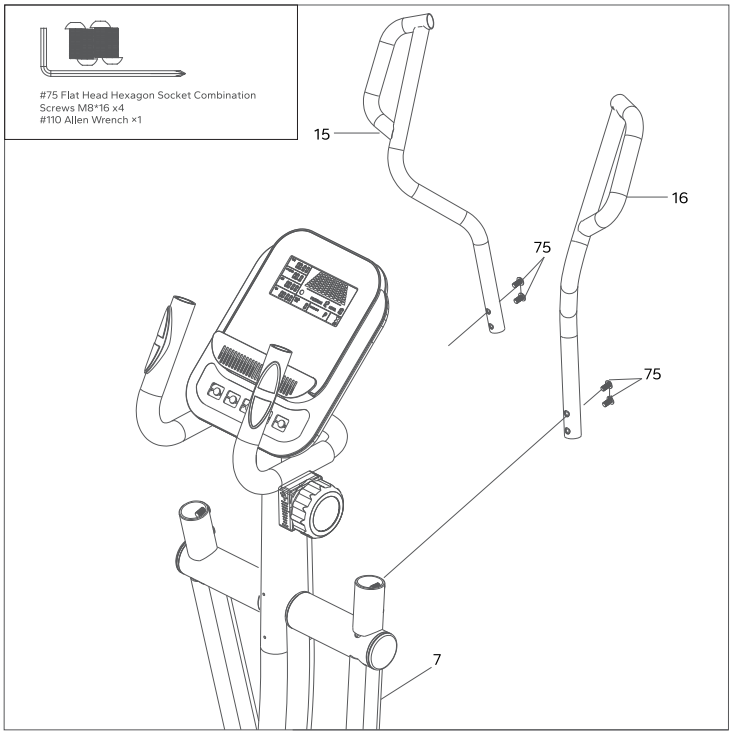

Step 9: Installing the Cup Holder and Handlebar Covers

A. Align the Cup Holder (63) with theholes on the Handlebar Post (4).
B. Use an Allen Wrench (110) and 2PCS Phillips Round Head Screws (107) to tighten the Cup Holder (63).
C. Align the Right Handlebar Cover (38&39) with the holes on the Right Lower Handle Pipe (7) and snap it closed.
D. Use an Allen wrench (110) and 1PCS Self-tapping Screw (106) to tighten the Right Handlebar Cover (38&39).
E. Install the Left Handlebar Cover using the same method.

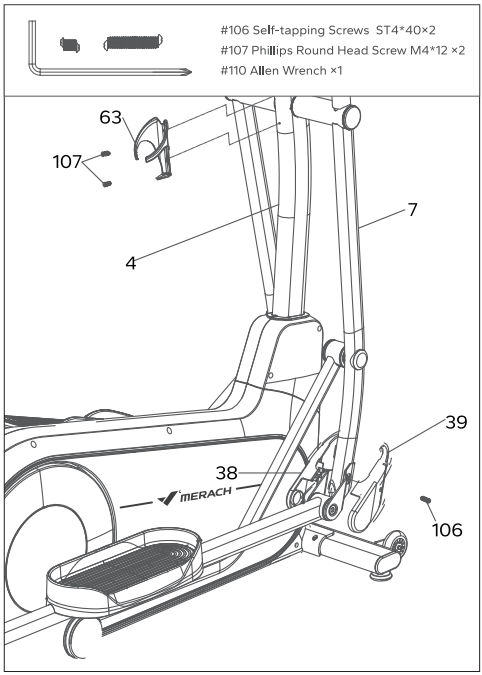

Step 10: Installing the Roller Cover

Attach the Roller Cover (64) to the Roller Assembly (61) by snapping it into place. The installation is the same on both sides.

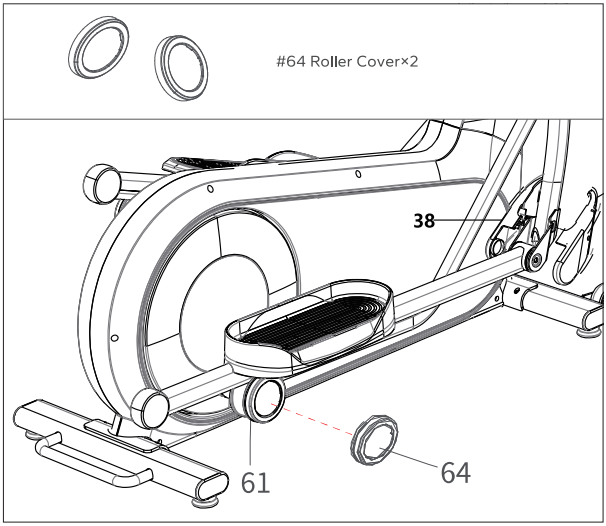

PRODUCT USAGE INSTRUCTIONS

Foot Pad Adjustment:

When the overall balance of the machine is poor, you can adjust it by using the 4 Adjustment Foot Pads (56) on the front and rear foot tubes. Rotate the foot pads to fully support the ground, and the machine will no longer shake.

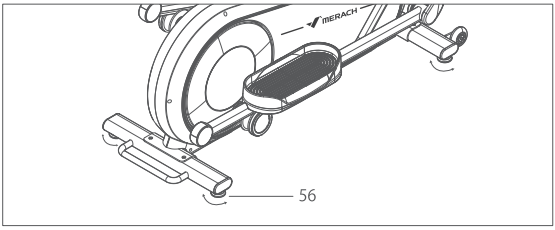

Machine Moving Instructions:

When moving the machine, lift the rear foot tube until the transport wheels on the front support frame touch the ground. With the wheels on the ground, you can easily move the machine to the desired location.

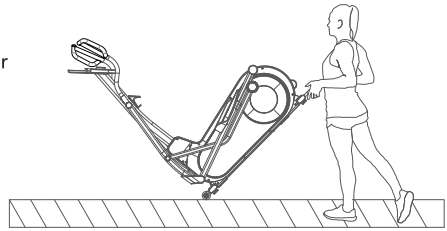

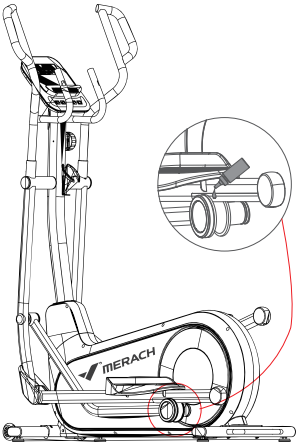

Maintenance Tips:

After the elliptical machine has been used for a period of time, the PU rollers may produce slight friction noises. In this case, please smear the attached lubricant on the PU rollers or rail to extend the service life of the PU rollers.

MONITOR INSTRUCTIONS

Window Display Description:

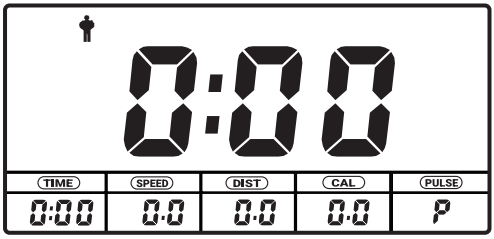

1. "**TIME**": Display exercise time. Time display range: 0M:00S-99M:59S.
2. "**SPEED**": Display exercise speed. Speed display range: 0.0-99.9KMH.
3. "**DIST**": Display exercise distance. Distance display range: 0.0-999.9KM.
4. "**CAL**": Display exercise calories. Calorie display range: 0.0-999KCAL.
5. "**PULSE**": Display heart rate range. Heart rate display range: 0-220BPM.
6. "**BODY FAT**": Displays body fat percentage, weight mass index and basal metabolic rate during exercise.

Button Function Description:

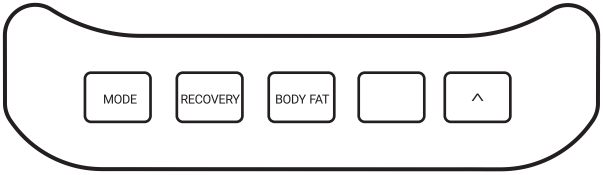

1. **"MODE": Select & Reset Button.**
   a. Short press this button to enter the setting mode and select the setting item to be adjusted.
   b. Press this button for 3 seconds to reset all exercise values.
2. **"RECOVERY": Heart Rate Recovery Button.**
   a. Short press this button to reset the heart rate index.
3. **"BODY FAT": Body Fat Test Button.**
   Short press this button to enter the body fat function test.
4. **"∨": - Button.**
   a. In setting mode, short press this button to adjust the value down.
   b. In working state, short press this button to adjust the display content of the main window in sequence.

5. "∧": + Button.
   a. In mode setting, short press this button to adjust the value up.
   b. In working state, short press this button to adjust the display content of the main window in sequence.

Operation Instructions:

1. Press any key to wake up the screen.
2. Press the "**MODE**" key to switch mode settings in sequence: **TIME, DISANCE, CALORIE, PULSE.**
3. Press the "∨" key and "∧" key to set related parameters.

Notes:

- When you do not need to set a value, you can directly press the "**MODE**" key to skip.
- After the exercise starts, the set display items will count down. When the countdown reaches 0, there will be three "didi" sounds.
- If the heart rate limit is set, when the heart rate exceeds the set limit, the "didi" sound will continue to prompt and the heart rate display window will flash.

4. During exercise, press the "∨" key and "∧" key to switch the main window display content in sequence: **TIME, SPEED, DISANCE, CALORIES, PULSE.**

Body Fat Test Function:

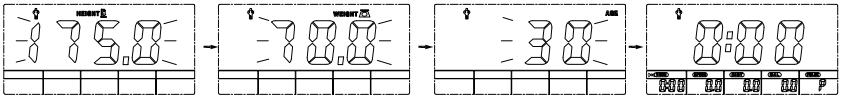

1. Operation instructions: When the exercise is stopped, press the "**BODY FAT**" button to enter the body fat test.
2. Press the "**MODE**" key to switch mode settings in sequence: **GENDER, HEIGHT, WEIGHT, AGE.**
3. Press the "∨" key and "∧" key to set related parameters.
4. With the heart rate monitor, the Body Fat test is automatically performed, when heart rate data is detected.

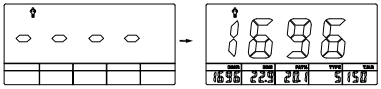

M.I (Body Mass Index)					
Gender/Age	Underweigh t	Healthy	Slightly Overweight	Overweight	Obese
Male/≤30	< 14	14~20	20.1~25	25.1~35	> 35
Male/ >30	< 17	17~23	23.1~28	28.1~38	> 38
Female/≤30	< 17	17~24	24.1~30	30.1~40	> 40
Female/ >30	< 20	20~27	27.1~33	33.1~43	> 43

FAT% (Body Fat)				
Gender	Low	Medium	Slightly High	High
Male	<13%	13%-25.9%	26%-30%	>30%
Female	<23%	23%-35.9%	36%-40%	>40%

M.R (Basal Metabolic Rate)

The average number of calories burned per day for basic survival

Ref: 1300±100 (22-40 years)

Body Type					
1	2	3	4	5	6
Skinny	Slim	Healthy	Overweight	Obese	Obesity

Heart Rate Recovery Function:

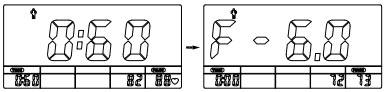

1. During exercise, press the "**RECOVERY**" button to enter the heart rate recovery test function.
2. Start a 60-second countdown, and the heart rate recovery level will be displayed after the countdown ends.
3. Hold the pulse sensor tightly with both hands until the countdown ends.
4. Heart rate level comparison table:

F1=1.0	BEST STATE
1.0 < F2 <2.0	WELL
2.0 < F3 <2.9	GOOD
3.0 < F4 <3.9	ORDINARY
4.0 < F5 <5.9	RRLATUVELY POOR
F6=6.0	BAD

APP SETUP INSTRUCTION

Download and use of MERACH

1. To download the MERACH app, scan the QR code or search "MERACH" in the Apple App Store® or Google Play Store.

MERACH APP Download

APP Connection Guide

GET IT ON Google Play Available on the App Store

2. Open the MERACH app. Log In or Sign Up.
3. Follow the in-app instructions to set up your device.

Download and use of KINOMAP

App Store

Google Play

1. To download the Kinomap app, scan the QR code or search "Kinomap" in the Apple App Store® or Google Play Store.
2. Open the Kinomap app. Log In or Sign Up.
3. Select the corresponding fitness equipment
4. Turn on Bluetooth, and choose Merach.
5. Select "Ellipticals", and find your "MRK-E27L-XXXX".
6. Start training and explore different workout methods.

MAINTENANCE GUIDE

If you are a fitness enthusiast, then it's essential to keep your fitness equipment in good condition for optimal performance and longevity. Here are some crucial maintenance steps to follow:

Keep the Equipment Clean:
It's crucial to maintain cleanliness by wiping down the surfaces with a mild cleaner, especially the parts that come into frequent contacts, such as the handles, seat, and rail. Avoid using acidic or alkaline cleaners, and refrain from using water or cleaners on the digital display screen. Pay extra attention to the slide rail ensuring it remains clean and is running smoothly.

Regularly Check Moving Parts:
Regularly inspect the moving parts such as the arms, wheels, pedals, etc., to ensure they are functioning smoothly and free of damage. If you notice any malfunctions, get them repaired as soon as possible, and regularly lubricate the moving parts to keep them running smoothly.

Inspect Electronic Components:
Regularly inspect the electronic components, such as the display screen, wires, and sensors, to ensure they are in good condition. If you notice any damage or malfunctions, contact the MERACH TEAM.

Check and Tighten Hardware:
Regularly check the hardware such as screws and bolts, for looseness and tighten them as needed. Regular use of the equipment can cause vibrations that may loosen parts over time, so tightening them regularly will keep your equipment in top condition.

By following these maintenance steps, you can ensure your fitness equipment remains in excellent condition and prolong its life span for many workouts to come.

If you notice any wear and tear on your machine during your regular inspection that may require replacement, please contact us at **support.eu@merach.com**.

WARM-UP

Do stretches before exercising. Warm muscles are easier to stretch, so start with a 5-10 minute warm-up, then do some stretches shown below - 5 times, 10 seconds or more per leg. Do it again after the workout.

1. Stretch down

Bend your knees slightly, slowly bend your body forward, relax your back and shoulders, and try to touch your toes with your hands. Hold for 10-15 seconds, then relax. Repeat 3 times (see Figure 1).

2. Seated hamstring stretch

Sit with one leg straight. Bring the other leg in so that it is snug on the inside of the straightened leg. Try to touch your feet with your hand's toe. Hold for 10-15 seconds, then relax. Repeat 3 times for each leg (see Figure 2).

3. Calf and Achilles tendon stretch

Stand with both hands against the wall or a tree, put one foot behind another. Keep the back leg straight and your heel on the ground, lean toward a wall or a tree. Hold for 10-15 seconds, then relax. Repeat 3 times for each leg (see Figure 3).

4. Quadriceps stretch

Reach back with your right hand, grab your right foot and slowly pull it toward your hips until you feel the muscles in the front of your thigh tense. Hold for 10-15 seconds, then relax. Repeat 3 times for each leg (see Figure4).

5. Sartorius (inner thigh muscle) stretch

Sit with your feet facing each other and your knees facing out. Grab your feet with both hands and pull toward your groin. Hold for 10-15 seconds, then relax.
Repeat 3 times(see Figure5).

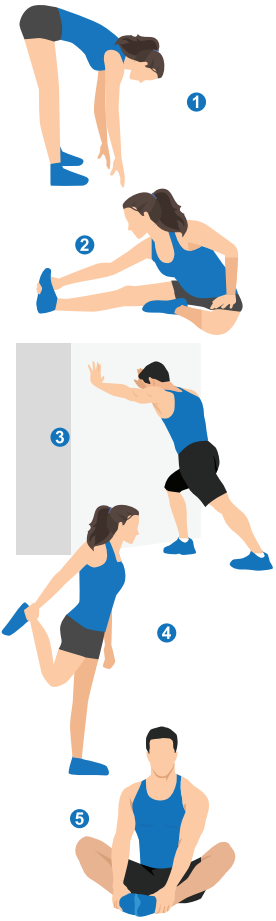

WARRANTY INFORMATION

Product Name	MERACH Magnetic Elliptical Machine
Model	MR-E27
Default Warranty Period	12 Months
For your own reference, we strongly recommend that you record your order number and date of purchase.	
Date of Purchase	
Serial Number	

Terms & Policy

The MERACH products are premium in material, craftsmanship, and service. MERACH 1-year limited warranty is effective from the date of purchase.
MERACH will replace defective products based on eligibility. Refunds are available to the original purchasers of our products within the first 30 days of purchase. This warranty extends only to personal use, doesn't apply to the commercial, rental, or any other uses for which the product is not intended for. There are no warranties other than the warranties expressly set forth with each product.

This warranty is non-transferable. MERACH is not responsible for any damages, losses or inconveniences caused by equipment's failure, user's negligence, user's abuse, or improper operation that does not follow the included user manual.

This warranty does not apply to the following situations:

- Damage due to abuse, accident, alteration or vandalism.
- Improper or inadequate maintenance.
- Damage in return transit.
- Unsupervised use by children under 14 years old.

MERACH and its subsidiaries are only responsible for damages caused by the intended use or as instructed in the user manual. Some states do not allow this exclusion or limitation of incidental or consequential losses, so the above disclaimer may not apply to you. This warranty gives you specific legal rights and you may also have other rights, which may vary from state to state.

All expressed and implied warranties, including the warranty of merchantability, are limited to the period of the limited warranty.

MERACH®

OUR SOCIAL MEDIA

merachfit.eu

Merachfit.eu

Merachfit_EU

merach_uk

Merachfit.UK

Merach UK

merach_uk

Support Email
EU: info.eu@merachfit.com
UK: info.uk@merachfit.com

Our Website
EU: merachfit.eu
UK: uk.merachfit.com