Скамья для жима с положительным углом наклона Protrain LFS147

СБОРКА

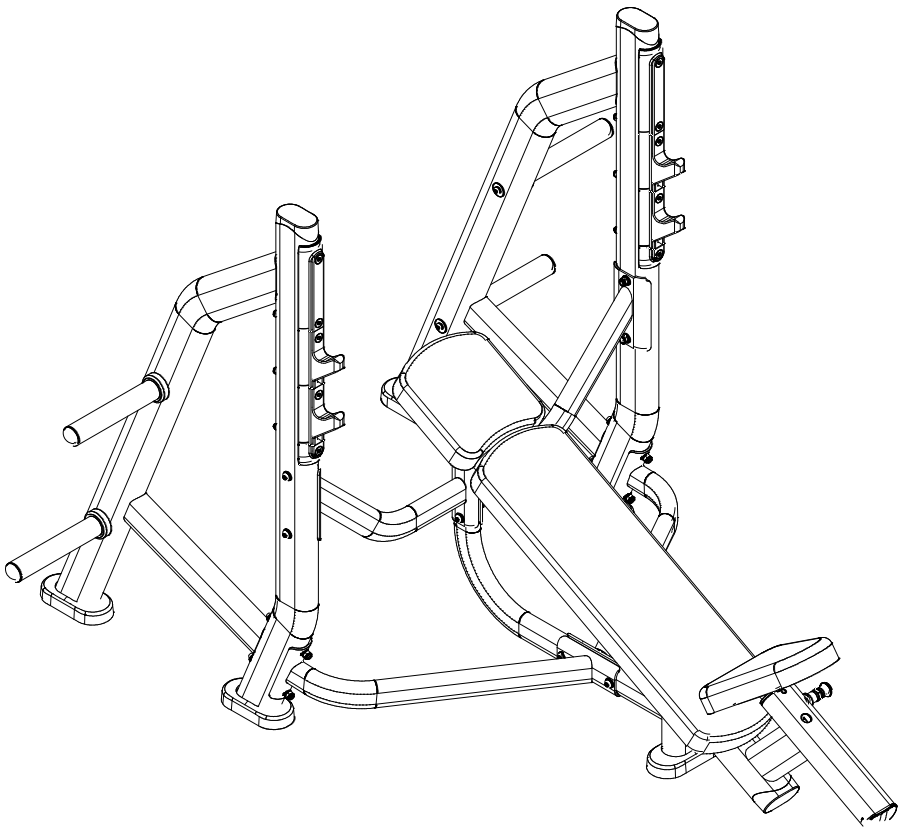

TO OBTAIN THE WARRANTY OF THIS PRODUCT, WE RECOMMEND THAT A QUALIFIED TECHNICIAN CARRIES OUT THE FULL ASSEMBLY.

IMPORTANT SAFETY INSTRUCTIONS

It is the sole responsibility of the purchaser of Brightway Fitness products to read the owner’ s manual, warning labels and instruct all individuals, on proper usage of the equipment. Understanding each and every warning to the fullest is important. It is recommended that all users of Brightway Fitness be informed of

the following information prior to use.

⚠ HEALTH WARNING

• Before starting any exercise or conditioning program you should consult with your personal physician to see if you require a complete physical exam. This is especially important if you are inactive, pregnant or suffer from any illness.

• If at any time during exercise you feel faint, dizzy or experience pain, stop exercising immediately and consult your physician.

• To avoid muscular pain and strain, begin each workout by stretching and warming up and end each session by cooling down and stretching.

⚠ INSTALLATION

Brightway Fitness recommends that all equipment:

• Be secured to or set up on a solid, level surface to stabilise and eliminate rocking or tipping over during training.

• Be set up with sufficient ventilation to ensure proper operation.

• Be set up with sufficient space around the equipment so that all exercises can be completed safely. It is recommended

that there should be at least 1 metre of space around the equipment where access is required to exercise.

⚠ PROPER USAGE

Before you use this equipment, please read the following safety instruction and abide by it, thanks!

• Please assemble the equipment following the assembly instruction.

• Be careful and use matched wrench tools during the assemble. Ask for help if have problem.

• Don't use caustic cleanser to clean and wipe it.

• If there are damages of small parts, please stop use the equipment at once and contact the purchased company or agency for changing. Install the new small parts properly and make sure the connect joints and working parts are fastened, avoiding dangerous during use.

• Please wear cloth and shoes suitable for exercise to keep user from accident.

• Parents or other supervising adults must provide close supervision of children if the equipment is used in the presence of children.

IMPORTANT SAFETY INSTRUCTIONS

⚠ INSPECTION

• Do not use or permit use of any equipment that is damaged, or has worn or broken parts. For all Brightway Fitness equipment use only replacement parts supplied by Brightway Fitness .

• Always make sure that all nuts and bolts are tightened prior to each use.

• Maintain labels and nameplates – do not remove labels for any reason. They contain important information.

• Equipment maintenance – preventative maintenance is the key to smooth operating equipment. Please ensure that you follow our maintenance tips to ensure the continued correct function of your Brightway Fitness equipment.

• Before any use, examine all accessories approved for use with the Brightway Fitness equipment for damage or wear.

• Should your Brightway Fitness equipment appear damaged or worn, do not attempt to use or repair the equipment yourself.

⚠ OPERATING WARNINGS

• It is the purchaser' s responsibility to instruct all users as to the proper operating procedures of all Brightway Fitness equipment.

• Keep children away from all moving parts. Parents must provide close supervision of children if the equipment is used in the presence of children.

• Do not wear loose fitting clothing or jewellery when using the equipment. It is also recommended that users tie up long hair to avoid contact with moving parts.

• Ensure that anyone not using the equipment stays clear of the user, accessories and moving parts while the machine is in operation.

⚠ USER WEIGHT LIMITATIONS

SAVE THIS INSTRUCTION MANUAL FOR FUTURE USE AND REFERENCE.

ASSEMBLY LIST

Main frame			Mobile seat combination			Connecting pipe			Reinforcement		
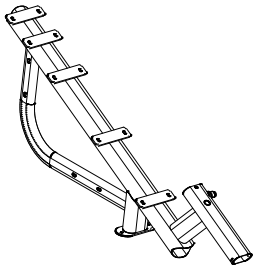			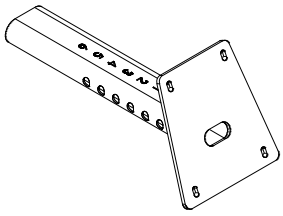			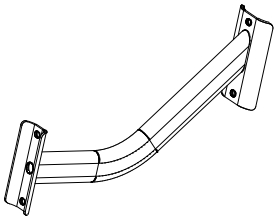			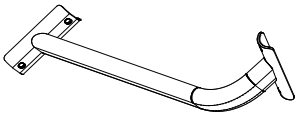		
1		1 PC	2		1 PC	3		2 PCS	4		2 PCS
Side frame assembly			Barbell			Short cushion			Long cushion		
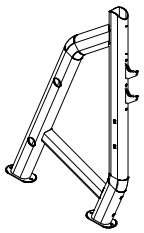			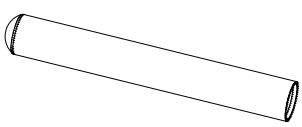			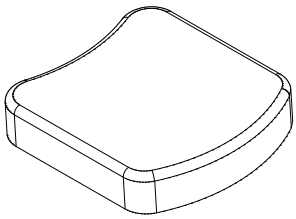			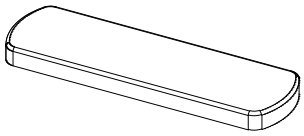		
5		2 PCS	6		4 PCS	7		1 PCS	8		1 PCS
cushion			Φ12 flat washer			Φ12 Spring washer			M12 Hexagon Lock Nut		
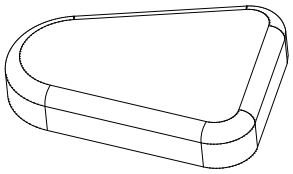			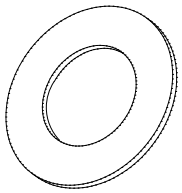			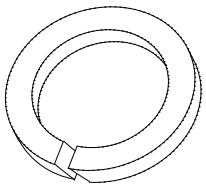			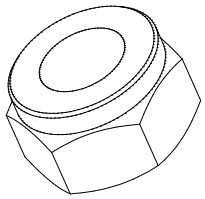		
9		1 PCS	10		16 PCS	11		12 PCS	12		12 PCS
Φ12 Arc gasket			M12X140 Hexagon socket head screw			M12X75 Hexagon socket head screw			M12X90 Hexagon socket head screw		
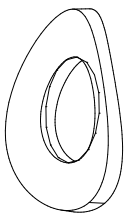			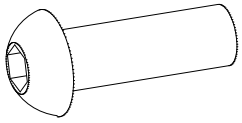			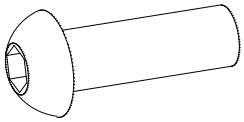			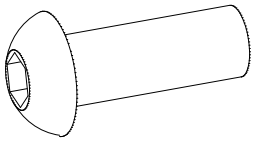		
13		4 PCS	14		4 PCS	15		4 PCS	16		4 PCS

ASSEMBLESTEPS

M10X30 Hexagon socket head screw			Φ10 Large gasket			Ø10 Spring washer			M8X25 Hexagon socket head screw		
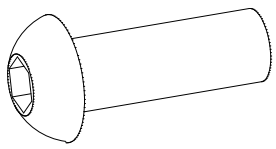			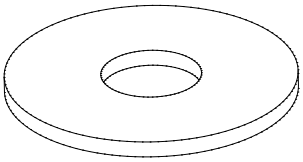			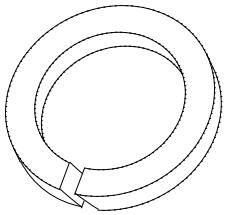			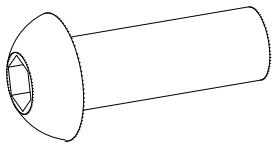		
17		4 PCS	18		4 PCS	19		4 PCS	20		14 PCS
Ø8 Spring washer			Φ8 flat washer								
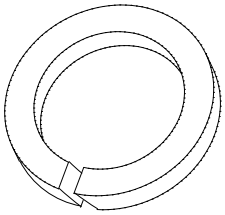			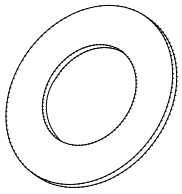								
21		14 PCS	22		14 PCS						

ASSEMBLESTEPS

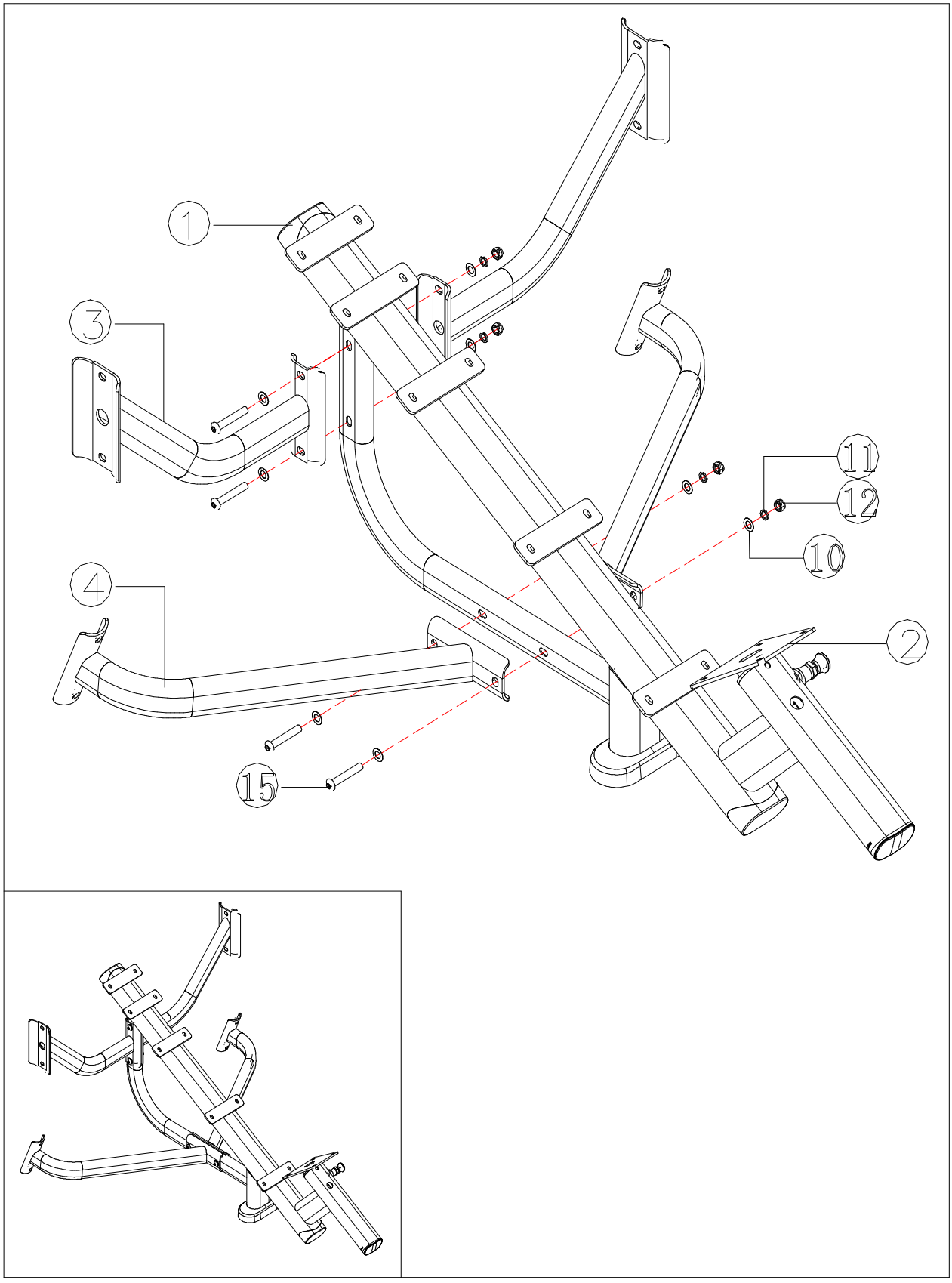

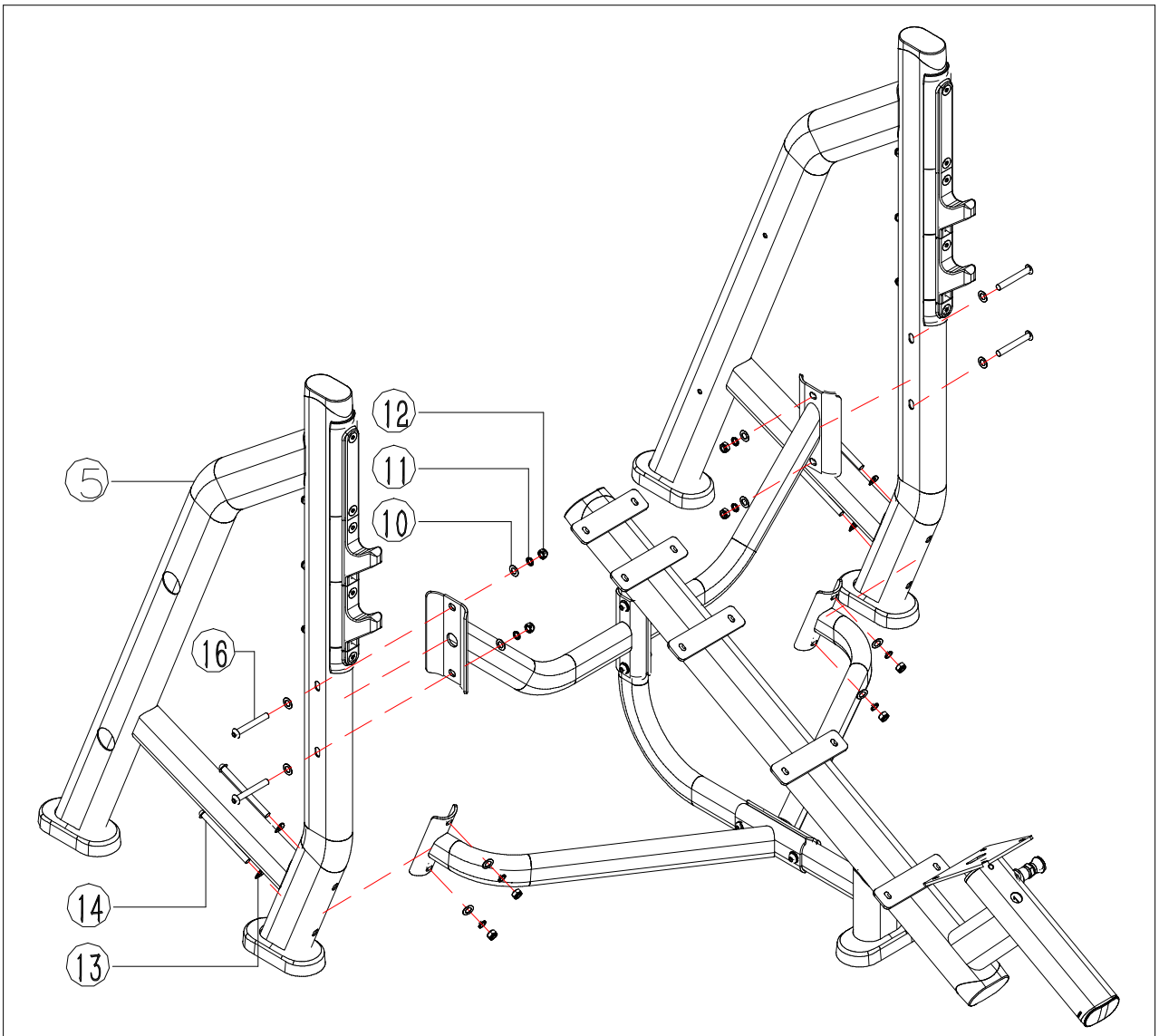
12
11
10
5
16
14
13

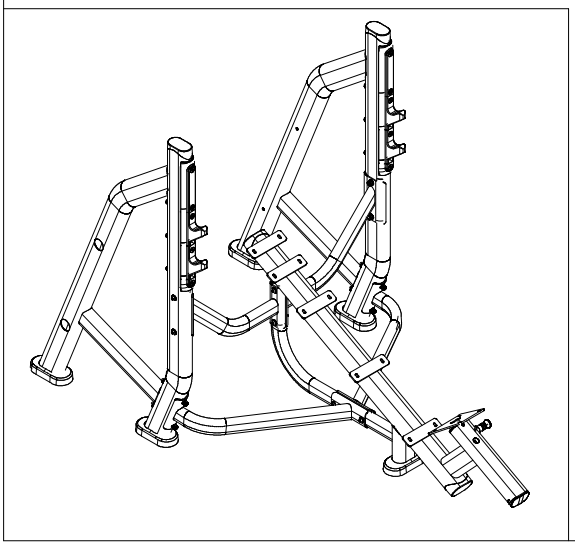

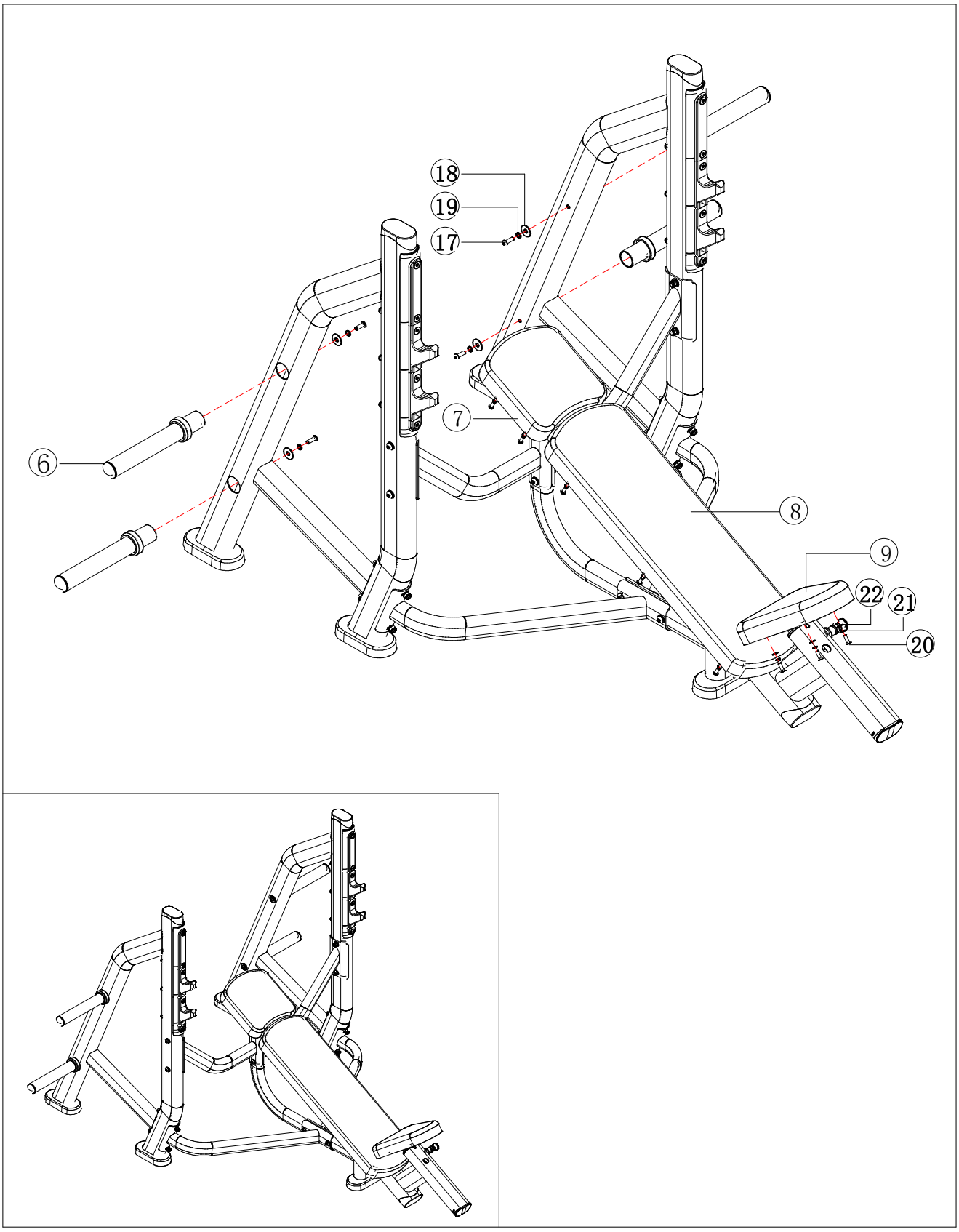
18
19
17
7
6
8
9
22
21
20

FITNESS TIPS & TECHNIQUES

AEROBIC EXERCISE

Aerobic exercise is any sustained activity that sends oxygen to your muscles via your heart and lungs. Aerobic exercise improves the fitness of your lungs and heart – your body' s most important muscle. Aerobic exercise fitness is promoted by any activity that uses your large muscles (arms, legs, or buttocks, for example). Your heart beats quickly and you breathe deeply. An aerobic exercise should form part of your entire exercise routine.

WEIGHT TRAINING

Along with aerobic exercising which helps get rid of and keep off the excess fat that our bodies can store, weight training is an essential part of the exercise routine process. Weight training helps tone, build and strengthen muscle. If you are working above your target zone, you may want to do a lesser amount of reps. Always consult your physician before beginning any exercise program.

MUSCLE CHART

The exercise routine that is performed on the will develop your whole body.

The targeted muscle groups are the chest, shoulders, back, legs and arms. It will also condition the circulatory system and provide a good aerobic workout. These muscle groups are highlighted on the muscle chart below.

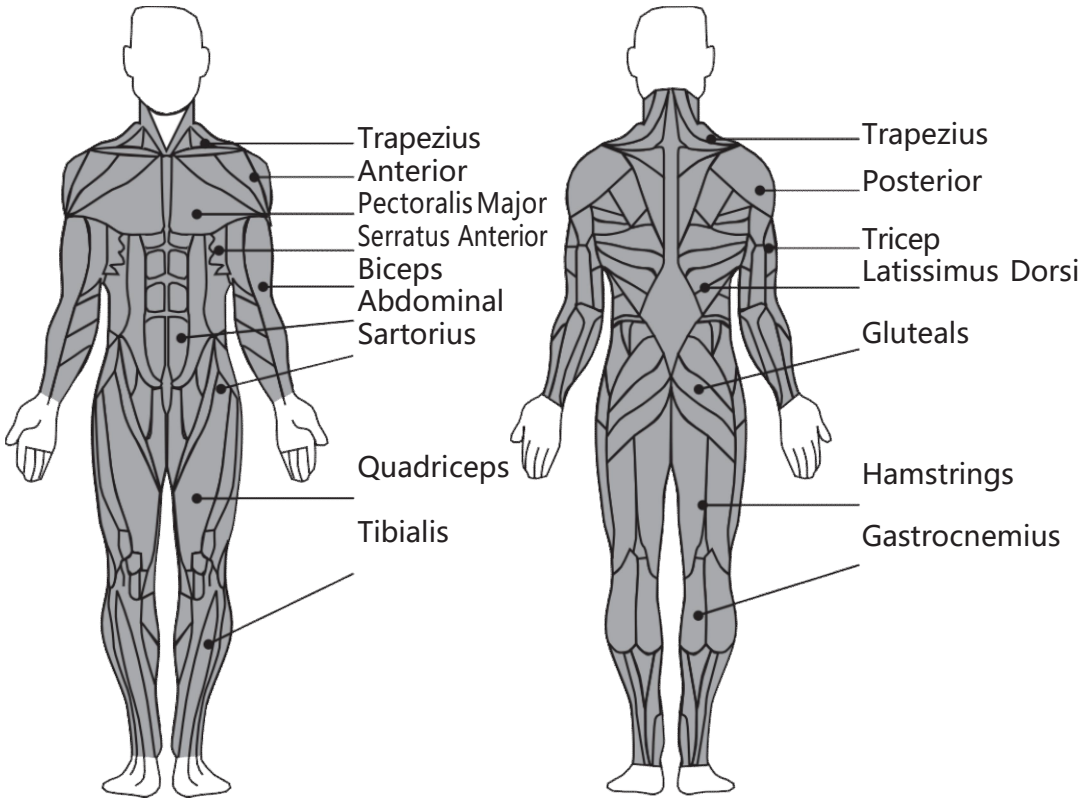

VISIT:

www.bltwfitness.com for equipment choices and exercise programs

CONDITIONING GUIDELINES

How you begin your exercise program depends on your physical condition. If you have been inactive for several years, or are severely overweight, you must start slowly and increase your time on the equipment, a few minutes per workout.

Initially, you may be able to exercise only for a few minutes in your target zone, however, your aerobic fitness will improve over the next 6 to 8 weeks. Don' t be discouraged if it takes longer. It' s important to work at your own pace. Ultimately, you' ll be able to exercise continuously for 30 minutes. The better your aerobic fitness, the harder you will have to work to stay in your target zone. Please remember these essentials:

- Have your doctor review your training and diet programs to advise you of a workout routine you should adopt.
- Begin your training program slowly with realistic goals that have been set by you and your doctor.
- Monitor your pulse frequently.
- Establish your target heart rate based on your age and condition

EXERCISE INTENSITY

To maximise the benefits of exercising, it is important to exercise with the proper intensity. The proper intensity level can be found by using your heart rate as a guide. For effective aerobic exercise, your heart rate should be maintained at a level between 65% and 85% of your maximum heart rate as you exercise. This is known as your target zone. You can find your target zone in the table below.

During the first few months of your exercise program, keep your heart rate near the low end of your target zone as you exercise. After a few months, your heart rate can be increased gradually until it is near the middle of your target zone as you exercise.

To measure your heart rate, stop exercising but continue moving your legs or walking around and place 2 fingers on your wrist. Take a 6 second heartbeat count and multiply the results by 10 to find your heart rate. For example, if your 6 second heartbeat count is 14, your heart rate is 140 beats per minute. (A 6 second count is used because your heart rate will drop rapidly when you stop exercising).

Adjust the intensity of your exercise until your heart rate is at the proper level.

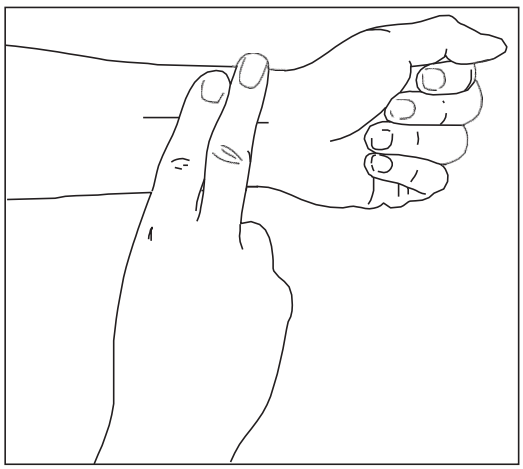

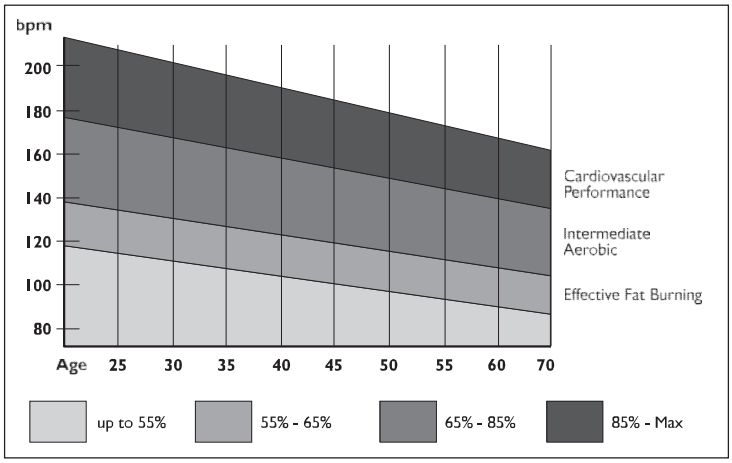

WARM UP & COOL DOWN

WORKOUT GUIDELINES

Each workout should include the following 3 parts:

1. A WARM-UP: 5 to 10 minutes of stretching and light exercise. A proper warm-up increases your body temperature, heart rate, and circulation in preparation for exercise.

2. TRAINING ZONE EXERCISE: 20 to 30 minutes of exercising with your heart rate in your training zone. (Note: During the first few weeks of your exercise program, do not keep your heart rate in your training zone for longer than 20 minutes).

3. COOL-DOWN: 5 to 10 minutes of stretching. This will increase the flexibility of your muscles and will help to prevent post-exercise problems.

EXERCISE FREQUENCY

To maintain or improve your condition, plan 3 workouts each week, with at least 1 day of rest between workouts. After a few months of regular exercise, you may complete up to 5workouts each week, if desired. Remember, the key to success is to make exercise a regular andenjoyable part of your everyday life.

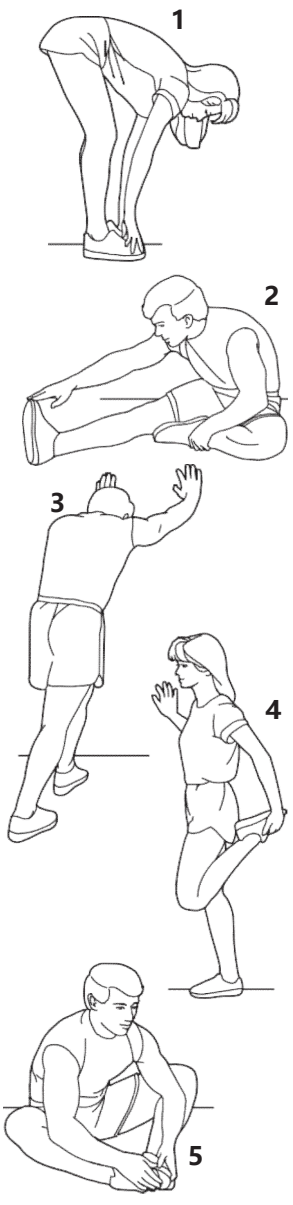

SUGGESTED STRETCHES

The correct form for several basic stretches are shown on the right. Move slowly as you stretch, hold the position and never bounce.

1. TOE TOUCH STRETCH

Stand with your knees bent slightly and slowly bend forward from your hips. Allow your back and shoulders to relax as you reach down toward your toes as far as possible. Hold for 15 counts, and then relax. Repeat 3 times.

Stretches: Hamstrings, back of knees and back.

2. HAMSTRING STRETCH

Sit with 1 leg extended. Bring the sole of the opposite foot toward you and rest it against the inner thigh of your extended leg. Reach toward your toes as far as possible. Hold for 15 counts, and then relax. Repeat 3 times for each leg.

Stretches: Hamstrings, lower back and groin.

3. CALF/ACHILLES STRETCH

With 1 leg in front of the other, reach forward and place your hands against a wall. Keep your back leg straight and your back foot flat on the floor. Bend your front leg, lean forward and move your hips toward the wall. Hold for 15 counts, and then relax. Repeat 3 times for each leg. To cause further stretching of the Achilles tendons, bend your back leg as well.

Stretches: Calves, Achilles tendons and ankles.

4. QUADRICEPS STRETCH

With 1 hand against a wall for balance, reach back and grasp 1 foot with your other hand. Bring your heel as close to your buttocks as possible. Hold for 15 counts, then relax. Repeat 3 times for each leg.
Stretches: Quadriceps and hip muscles.

5. INNER THIGH STRETCH

Sit with the soles of your feet together and your knees outward. Pull your feet toward your groin area as far as possible. Hold for 15 counts, and then relax. Repeat 3 times.

Stretches: Quadriceps and hip muscles.

AFTER-SALES SERVICE

If there are any problems or malfunctions in the Brightway Fitness equipment you purchased, please contact your sales manager in time. He will help you find the cause of the problem and help you solve the problem, if it is a problem with parts If it cannot be ruled out in time, the company' s professional after-sales service personnel will also be arranged to give more professional after-sales service.

COST OF REPAIRS

UNDER WARRANTY

Any items still under warranty will be repaired free of charge, as long as it complies with the terms and conditions of the warranty (refer to "warranties" section in this manual). Any items that need to be repaired that are NOT covered in the warranty will be for the Consumer' s expense. A quote for the repair/replacement of these items will be provided to the Consumer for approval prior to repairs being conducted.

OUT OF WARRANTY

Any items that need to be repaired once the warranty has expired will be for the Consumer' s expense including call out fees.

A quote for the repair/replacement of these items will be provided to the Consumer for approval prior to repairs being